IREB Quiz Questions

* Required

1. Email *

2. 1) You have to recruit a requirement engineer. Which combination of skills is the best combination? * 1 point

Mark only one oval.

- linguistic competent, analytical thinking, testing skills
- communication skills, moderation skills, ability to convince
- domain knowledge, coding skills, testing skills
- project management skills, moderation skills, an ability to display empathy

3. 2) A person is about to be assigned to your project as a requirements engineer. What is the biggest risk? The requirement engineer: * 1 point

Mark only one oval.

- doesn't have project management skills
- has no domain knowledge
- is timid and shy
- is new in this organization, so he doesn't have any knowledge about the organization

4. 3) Which of the following statements best describes the term "stakeholder"? * 1 point

Mark only one oval.

- everyone whose wishes have to be considered in the requirements specification
- all members of the project team;
- a person or organization that has a (direct or indirect) influence on a system's requirements
- the total of all people named as a source for any requirements specification

5. 4) Which of the following statements typically characterizes the relationship between a requirements engineer and a stakeholder in the role of a tester? * 1 point

Mark only one oval.

- The requirements engineer provides input for the work of the stakeholder
- The results of the requirements engineer are being managed by the stakeholder
- The stakeholder provides input for the work of the requirements engineer
- The stakeholder monitors the work of the requirements engineer
- The work of the requirements engineer is not related to the mentioned role of the stakeholder

6. 5) During an acceptance test a defect was detected, which could be attributed to the requirements having been incorrectly interpreted by the software developers. Which of the statements fits this circumstances? Pick the two you think are best * 2 points

Check all that apply.

- [ ] the correction will only generate minor costs, since only the requirements specification must be changed;
- [ ] the defect should already have been recognized during the review of the requirements specification;
- [ ] in the worst case, it could happen that the architecture has to be reworked which would generate substantial costs
- [ ] the defect should already have been recognized during the system test

7. 6) Which three of the following skills are important for the requirements engineer? * 3 points

Check all that apply.

- [ ] Communication skills
- [ ] Analytical thinking
- [ ] Conflict resolution
- [ ] Testing skills

8. 7) Which statements are TRUE/FALSE for Requirements? * 2 points

Check all that apply.

	True	False
There are three kinds of requirements: functional, quality and constraints.	☐	☐
Quality requirements describe functionality.	☐	☐

9. 8) Which statements about functional and quality requirements are TRUE/FALSE? * 7 points

Check all that apply.

	True	False
Functional requirements describe (inter-) actions of the system	☐	☐
Functional requirements have a large impact on the project and customer satisfaction, where quality requirements have not	☐	☐
Quality requirements describe the properties, or characteristics that the product shall have	☐	☐
Functional requirements describe a capability that the stakeholder needs or an action the product shall take	☐	☐
ISO25010 can be used for all quality requirements	☐	☐
For quality requirements you should typically contact the same stakeholders as for the functional requirements	☐	☐
Quality requirements influence further development	☐	☐

10. 9) You wish to specify acceptance criteria for portability for the development of an information system. Which of the following statements is best suited? * 1 point

Mark only one oval.

- ( ) The software must be readily changeable
- ( ) The system must run with full functionality under both Linux and Windows 10
- ( ) The user must have his choice of different languages in the system
- ( ) The system is not allowed to weigh more than 12 kg

11. 10) Which one of the following is not one of the four major activities of requirements engineering? * 1 point

Mark only one oval.

- Requirements management
- Requirements elicitation
- Requirements validation and negotiation
- Requirements scoping

12. 11) To determine scope and boundaries of a system context diagrams are often being used. Which three of the following attributes are mandatory in context diagrams? * 3 points

Check all that apply.

- [ ] scope
- [ ] content
- [ ] context
- [ ] interfaces (with its environment)
- [ ] people

13. 12) Consider the following statement about scope and context. Which statements are TRUE/FALSE? * 5 points

Check all that apply.

	True	False
By setting the scope we specify what “outside” and “inside” means – in relation to the system	☐	☐
Requirements engineering cannot involve different scopes (e.g. enterprise, department, IT system, etc.);	☐	☐
Context describes the size of the system	☐	☐
Scope describes the organizations, neighboring systems, functionality (or similar) with a connection to the target system	☐	☐
Requirements are always restricted by the scope	☐	☐

14. 13) At the beginning of a project, the boundary between a system and its context is often diffuse, the so-called ‘grey zone’. Indicate which of the following statements are true and which are false. * 3 points

Check all that apply.

	True	False
A diffuse boundary is often not recognized for a long time because it is not depicted in the context diagram	☐	☐
A diffuse boundary between a system and the context indicates that the interfaces between the system and the environment have not yet been clarified	☐	☐
A diffuse boundary between a system and the context exists mainly at the beginning of a RE process and must be managed during the course of the RE process.	☐	☐

15. 14) Indicate which of the following statements about the main purpose of a context diagram are true and which are false: A context diagram is used .... * 4 points

Check all that apply.

	True	False
to identify system boundaries	☐	☐
to test the requirements from the point of view of consistency and clarity	☐	☐
to identify all stakeholders of the system	☐	☐
to illustrate the sequencing of the exchange between the system and its context.	☐	☐

16. 15) Indicate the items of information which are mandatory for them to be visible in a context diagram (multiple answers possible). * 1 point

Check all that apply.

- ☐ system name
- ☐ neighboring technical systems
- ☐ system functions
- ☐ logical outputs
- ☐ system parameters

17. 16) Which statements are TRUE/FALSE for Requirements Engineering? * 2 points

Check all that apply.

	True	False
A full understanding of system context is essential for successful requirements engineering.	☐	☐
The system boundary is not likely to shift during the requirements engineering process.	☐	☐

18. 17) What is the best description of a stakeholder? * 1 point

Mark only one oval.

- Any person who has an interest in the product and therefore has requirements for it
- The person who pays for the development of the product, or who has organizational responsibility for the project
- Any persons and/or systems that interact with a product use case
- Any person that buys the product
- Any person who has responsibility for producing the requirements specification
- Any person or system that manipulates the product

19. 18) Which of the following can be used as sources from which requirements can be obtained? (more than one option possible) * 1 point

Check all that apply.

- [ ] User manual of a predecessor system being replaced
- [ ] Standards and specifications, including company policies
- [ ] Domain specific documentation
- [ ] Stakeholders
- [ ] Systems of the competition

20. 19) According to Kano, requirements can be divided into three categories: Basic factors (dissatisfiers), Performance factors (satisfiers) and Excitement factors (delighters). Which of the following statements are TRUE/FALSE? * 5 points

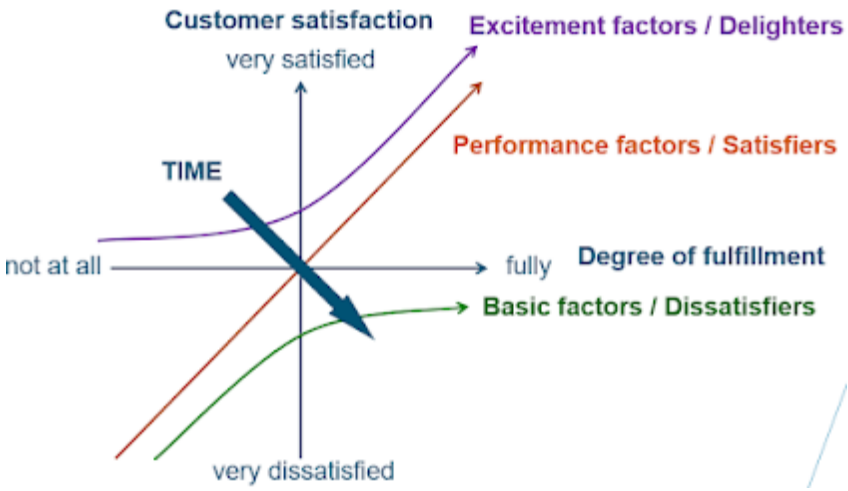

Check all that apply.

	True	False
The customer regards performance factors as prerequisites and takes these for granted	☐	☐
Excitement factors are factors that increase customer satisfaction if delivered but do not cause dissatisfaction if they are not delivered	☐	☐
Basic factors are the minimum requirements which will cause dissatisfaction if they are not fulfilled, but do not cause customer satisfaction if they are fulfilled.	☐	☐
Over time, excitement factors can change into performance factors	☐	☐
Over time, basic factors can change into performance factors.	☐	☐

21. 20) Which statements are TRUE/FALSE for using prototypes? * 4 points

Check all that apply.

	True	False
The stakeholders will get a good impression of the maturity of the product	☐	☐
Using prototypes may uncover missing functionality	☐	☐
Prototypes make it easier to visualize the system	☐	☐
Prototypes are often heavily focused on the user interface	☐	☐

22. 21) Indicate for each of the following techniques whether it is suitable for the elicitation of requirements * 5 points

Check all that apply.

	Suitable	Not Suitable
observation techniques	☐	☐
requirements metrics	☐	☐
study of existing user manuals	☐	☐
workshops	☐	☐
work product planning	☐	☐

23. 22. Choose the five most important guidelines for documenting requirements ? * 5 points

Check all that apply.

- [ ] Use “must”, “can” and similar words carefully
- [ ] At least one solution per requirement
- [ ] Consistent terminology
- [ ] Natural language has no advantages over graphical models, therefore only graphical models should be used
- [ ] Short and concise sentences and paragraphs
- [ ] Use colors for clarifications
- [ ] One requirement per sentence (no “and”), no nesting, active voice
- [ ] At least one graphical model shall be used
- [ ] Avoid generalizations (do not use “all” with an unclear reference, etc.), clear references.

24. 23) Give the two correct statements about Glossaries. * 2 points

Check all that apply.

- [ ] Solutions are not part of a requirement, but they can be found in the glossary
- [ ] A glossary contains the requirements;
- [ ] A glossary contains at least the terms that could potentially be ambiguous in the context they are considered
- [ ] A glossary is only useful for the requirement engineer
- [ ] Explanations of abbreviations and acronyms should be part of a glossary

25. 24) You are handed the following requirements. Which three violations to requirements rules are most severe? * 3 points

- **A1 customers are entered**
- **A2 each customer has a first name and a last name**
- **A3 each person is assigned a number**
- **A4 the number is 4 digits long**
- **A5 the system prints out all of them**

Check all that apply.

- [ ] passive formulation of A1
- [ ] inconsistent terminology “customer” and “person” in A1 and A3
- [ ] use of generalization “each” in A3
- [ ] subject not specific enough (“the system”) in A5
- [ ] ambiguous reference for the generalization “all of them” in A5

26. 25) Which one of the following is a disadvantage of documenting requirements using natural language? * 1 point

Mark only one oval.

- ( ) Natural language is widely used
- ( ) There is no need to learn a new notation
- ( ) Natural language can be used for any perspective
- ( ) Natural language is potentially ambiguous

27. 26) Which statements about documentation are TRUE/FALSE? * 2 points

Check all that apply.

	True	False
Using models to document requirements tends to reduce ambiguity	[ ]	[ ]
Standardized documentation structures are often tailored	[ ]	[ ]

28. 27) Requirements documents are used for the following purpose: (multiple answers possible) * 1 point

Check all that apply.

- [ ] Planning
- [ ] Architectural design
- [ ] Coding
- [ ] Testing

29. 28) Which one of the following is not an advantage of applying natural language for the specification of system requirements? * 1 point

Mark only one oval.

- ( ) It offers a strictly defined focus
- ( ) It supports a good readability
- ( ) Natural language can be universally applied
- ( ) No prior knowledge is necessary regarding the notation

30. 29) Which two of the following statements regarding requirements templates are true * 2 points

Check all that apply.

- [ ] Some requirements templates are also called 'boiler plates'
- [ ] Requirements templates increase the creativity of the requirements engineers
- [ ] Requirements templates are suitable in a formal development process
- [ ] It is best to make the use of requirements templates mandatory

31. 30) Consider the following diagram. What are X1, X2 and X3? Choose only one option. * 1 point

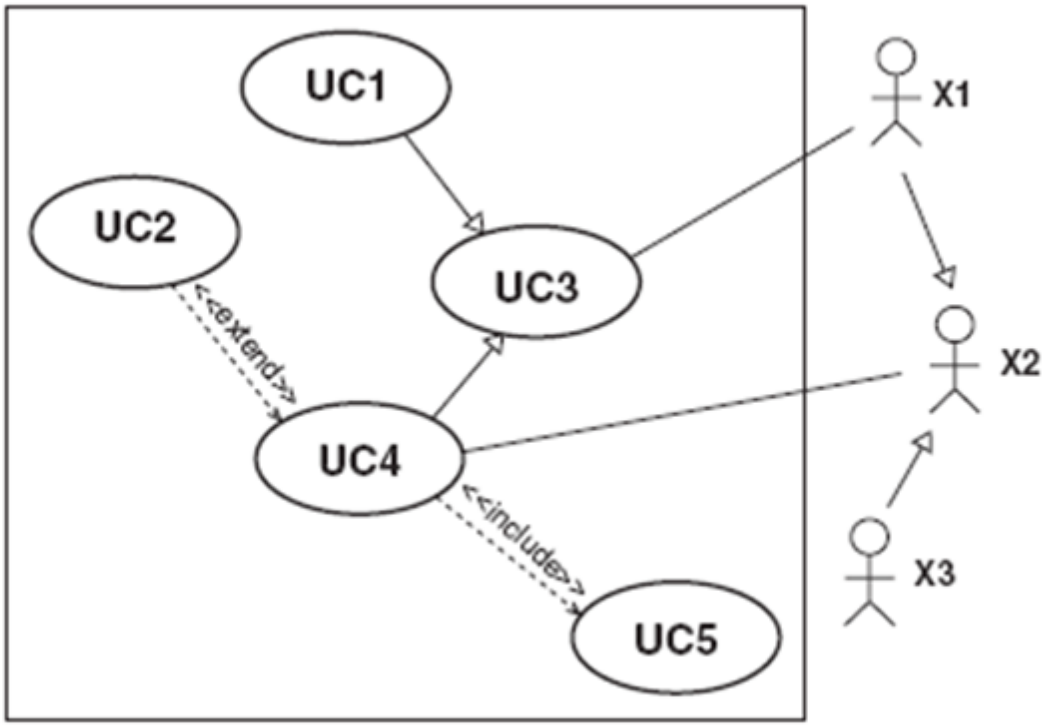

Mark only one oval.

- Roles
- Actors
- Users
- Personas
- Interfaces

32. 31) You work for a parcel service. A colleague of yours has drawn up a use case diagram. Mark each statement as true or false? * 5 points

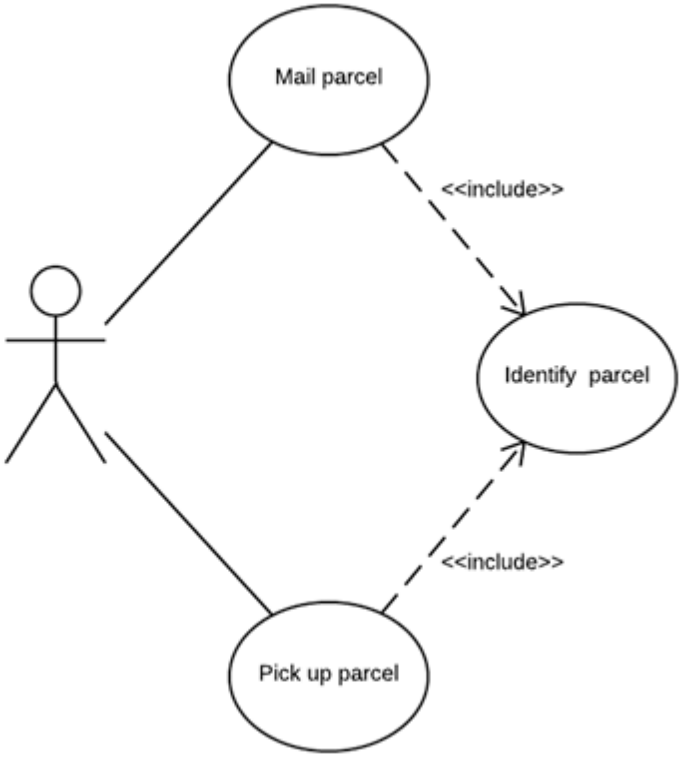

Check all that apply.

	True	False
The relationship between “Pickup parcel” and “Identify parcel” is correctly modelled	☐	☐
The system border is missing	☐	☐
The cardinalities are missing	☐	☐
The actor’s name is missing	☐	☐
A use case diagram cannot be used to depict business processes	☐	☐

33. 32) What kind of diagram is shown in the following figure? Choose only one option. * 1 point

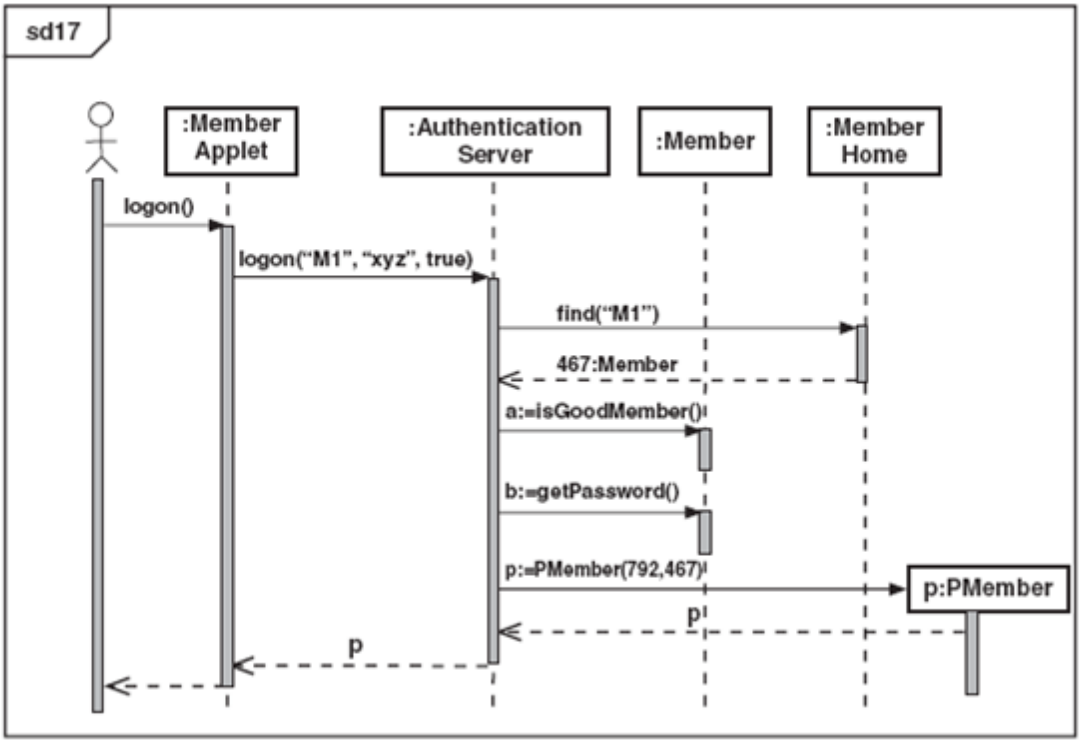

Mark only one oval.

- State machine diagram
- Activity diagram
- Class diagram
- Use case diagram
- None of the above

34. 33) Which two mistakes can be found in the following activity diagram? * 2 points

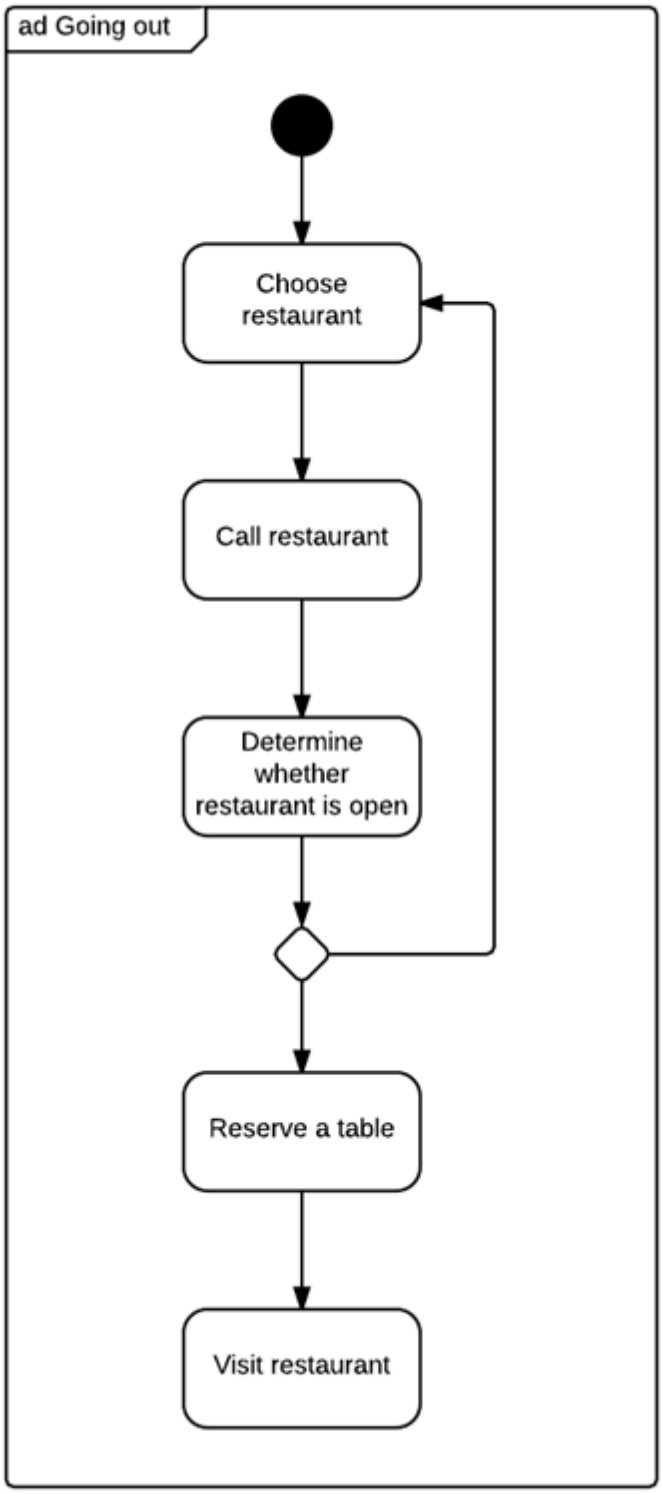

Check all that apply.

- [ ] Two arrows point to the activity “Choose restaurant”: incomplete notation for merge
- [ ] The actors have been omitted.
- [ ] The guards for the decision nodes are missing
- [ ] The end node is missing
- [ ] The shapes of the activities are drawn wrong (their corners aren’t round enough)

35. 34) Which error can be found in the following state diagram? * 1 point

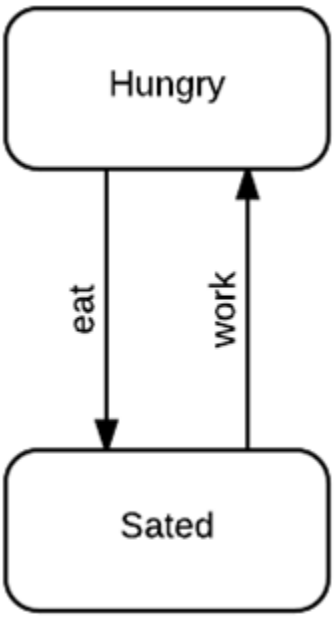

Mark only one oval.

- The initial state is missing
- The activities executed during the states are missing;
- The guards are missing
- The diagram lacks a system border
- States should be modelled with straight rectangles (no rounded corners)

36. 35) Which of the statements below are true? which are false? * 6 points

Check all that apply.

	True	False
A use case “extends” relation is invoked only under certain conditions.	☐	☐
Attributes are associated with subentities, not superentities	☐	☐
Operations describe the data associated with an entity.	☐	☐
Attributes describe what a class can do.	☐	☐
A role describes the nature of the relationship between two classes.	☐	☐
Behavioral requirements models focus on the states of a system and the events that trigger changes in states.	☐	☐

37. 36) During acceptance test several defects are found. Which statement are correct? * 1 point

Mark only one oval.

- These defects should already have been found during system testing
- Tell the stakeholders that the system can’t be accepted
- The defects could have been found during the review of the requirements
- Do nothing, you (the requirements engineer) are not involved in testing at all

38. 37) Which three techniques can be used for requirements validation? * 3 points

Check all that apply.

- ☐ Walkthroughs
- ☐ Audits
- ☐ Inspections
- ☐ Creation of traceability matrices
- ☐ Prototypes

39. 38) What is the main reason for using prototypes to validate requirements? 1 point

Mark only one oval.

- A prototype clarifies whether the requirement can be implemented in architecture and design
- A prototype serves as a system for the customer's requirements
- A prototype supports the stakeholders evaluating usability and system behavior
- A prototype serves as the basis for the further implementation of the requirements

40. 39) Which two types of syntactic checks are carried out when reviewing a requirements document? * 2 points

Check all that apply.

- [ ] Checking whether all abbreviated terms are explained in the abbreviation list
- [ ] Checking whether the layout of the document conforms to the company standard
- [ ] Checking whether the test cases can be derived from the requirements
- [ ] Checking whether all requirements are present in the document

41. 40) Which of the following are commonly used requirements validation techniques? * 1 point

Check all that apply.

- [ ] Apprenticing
- [ ] Commenting
- [ ] Prototyping
- [ ] Inspections
- [ ] Failure Mode and Effect Analysis (FMEA)
- [ ] Brainstorming
- [ ] Usage of checklists

42. 41) The requirements are approved by the stakeholders. But two weeks later, it seems that a requirement has been forgotten by one of the stakeholders. What is the best reaction for the requirement engineer? 1 point

Mark only one oval.

- Do nothing. The stakeholder has to take action himself
- Inform the architect
- Add the requirement
- Submit a change request

43. 42) Which two statements are true for the attribute Priority * 2 points

Check all that apply.

- [ ] Priorities will not change over time
- [ ] Requirements are prioritized to determine their order of implementation
- [ ] Once the requirements are prioritized all conflicts between stakeholders have disappeared
- [ ] Different stakeholders will have different goals and therefore have other criteria for allocating priorities
- [ ] End users are NOT involved in prioritizing the requirements

44. 43) Which statements are TRUE/FALSE? * 5 points

Mark only one oval per row.

	True	False
Not everyone needs to understand and/or see everything, so we use views;		
Wiegers prioritization technique is applied to all requirements		
A summary of all requirements is also a view		
A Change Control Board must always be a large formal group regardless of project size		
The management view, user view and legal view are examples of possible views.		

45. 44) Which two statements about traceability are false * 2 points

Check all that apply.

- [ ] Unambiguous identification is a prerequisite for traceability;
- [ ] In complex environment you cannot use a tool to establish traceability
- [ ] Requirements traceability is especially advantageous in the later development phases
- [ ] Establishing traceability is easy, and even easier when using a tool

46. 45) Which statement is FALSE? * 1 point

Mark only one oval.

- ( ) Configuration management should be conducted on the level of requirements as well as on the level of requirements documents
- ( ) The history of a requirement is not important. Only the latest version of a requirement matters
- ( ) Requirements traceability plays an essential role for change management
- ( ) A change in requirements can take on the character of a contractual change

47. 46) Which one of the following is not a basis for establishing priorities? * 1 point

Mark only one oval.

- ( ) Business importance
- ( ) Technical dependencies
- ( ) The requirements engineers preferences
- ( ) Risk
- ( ) Cost

48. 47) A project has been started in which more than 25 branches are involved. Lots of people will be interviewed for acquiring initial requirements. The project will be using a Wiki tool. Which statement fits best? * 1 point

Mark only one oval.

- It's not a useful tool, because version control is not possible
- It's a useful tool, because everybody has access to the tool
- Tools are expensive, so to save costs don't use them
- With a Wiki tool traceability between requirements is very easy

49. 48) Which statements about tools (requirements tools) are TRUE/FALSE? * 7 points

Mark only one oval per row.

	True	False
Tools are easy to implement		
The use of simple tools like word processing programs can be useful		
Tools can solve all requirements problems		
Tools will help you when you do not have a RE process		
Tooling can support the tracking of requirements status		
Tooling cannot support requirements-specific communication within the team		
Tooling can support the generation of requirements views for specific stakeholders		

50. 49) Which one of the following was not mentioned as an expected property (feature) of a requirements management tool? * 1 point

Mark only one oval.

- The tool is expected to be able to manage a variety of items such as natural language and conceptual models
- The tool is expected to be able to manage logical relationships among requirements
- The tool must be web-based
- The tool is expected to assign a unique ID to each artefact being managed.

51. 50) When evaluating potential tools which one of the following views need not be considered? 1 point

Mark only one oval.

- Project view
- Marketing view
- User view
- Economic view
- Process view

This content is neither created nor endorsed by Google.

Google Forms